Centre No.						Paper Reference							Surname	Initial(s)
Candidate No.						6	6	7	8	/	0	1	Signature	

Paper Reference(s)

6678/01

Edexcel GCE

Mechanics M2

Advanced/Advanced Subsidiary

Wednesday 21 May 2008 – Afternoon

Time: 1 hour 30 minutes

Examiner's use only

Team Leader's use only

Question Number	Leave Blank
1	
2	
3	
4	
5	
6	
7	
Total	

Materials required for examination
Mathematical Formulae (Green)

Items included with question papers
Nil

Candidates may use any calculator allowed by the regulations of the Joint Council for Qualifications. Calculators must not have the facility for symbolic algebra manipulation, differentiation and integration, or have retrievable mathematical formulae stored in them.

Instructions to Candidates

In the boxes above, write your centre number, candidate number, your surname, initials and signature.
Check that you have the correct question paper.
Answer ALL the questions.
You must write your answer to each question in the space following the question.
If you need more space to complete your answers to any question, use additional sheets.
Whenever a numerical value of g is required, take $g = 9.8$ m s^{-2}.
When a calculator is used, the answer should be given to an appropriate degree of accuracy.

Information for Candidates

A booklet 'Mathematical Formulae and Statistical Tables' is provided.
Full marks may be obtained for answers to ALL questions.
The marks for individual questions and the parts of questions are shown in round brackets: e.g. **(2)**.
There are 7 questions in this question paper. The total mark for this paper is 75.
There are 24 pages in this question paper. Any blank pages are indicated.

Advice to Candidates

You must ensure that your answers to parts of questions are clearly labelled.
You must show sufficient working to make your methods clear to the examiner.
Answers without working may not gain full credit.

This publication may be reproduced only in accordance with Edexcel Limited copyright policy.
©2008 Edexcel Limited.

Printer's Log. No.
H29498A
W850/R6678/57570 3/3/3/3/2/

H 2 9 4 9 8 A 0 1 2 4

Turn over

edexcel
advancing learning, changing lives

Leave blank

1. A lorry of mass 2000 kg is moving down a straight road inclined at angle α to the horizontal, where $\sin\alpha = \frac{1}{25}$. The resistance to motion is modelled as a constant force of magnitude 1600 N. The lorry is moving at a constant speed of 14 m s^{-1}.

Find, in kW, the rate at which the lorry's engine is working.

(6)

Leave blank

2. A particle A of mass $4m$ is moving with speed $3u$ in a straight line on a smooth horizontal table. The particle A collides directly with a particle B of mass $3m$ moving with speed $2u$ in the same direction as A. The coefficient of restitution between A and B is e. Immediately after the collision the speed of B is $4eu$.

(a) Show that $e = \frac{3}{4}$.

(5)

(b) Find the total kinetic energy lost in the collision.

(4)

Leave blank

3.

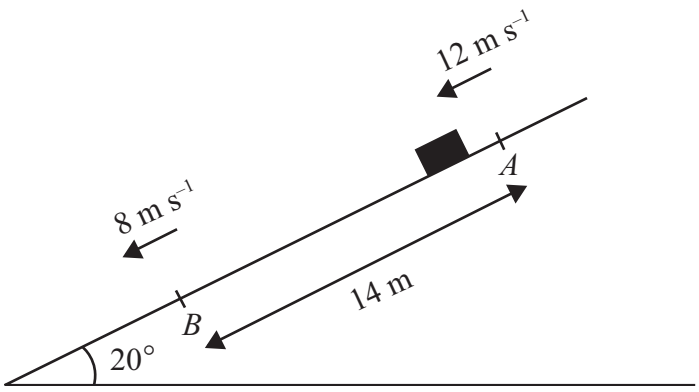

Figure 1

A package of mass 3.5 kg is sliding down a ramp. The package is modelled as a particle and the ramp as a rough plane inclined at an angle of 20° to the horizontal. The package slides down a line of greatest slope of the plane from a point A to a point B, where $AB = 14$ m. At A the package has speed 12 m s^{-1} and at B the package has speed 8 m s^{-1}, as shown in Figure 1. Find

(a) the total energy lost by the package in travelling from A to B,

(5)

(b) the coefficient of friction between the package and the ramp.

(5)

Leave blank

Question 3 continued

Q3

(Total 10 marks)

Leave blank

4. A particle P of mass 0.5 kg is moving under the action of a single force $\mathbf{F}$ newtons. At time t seconds,

$$\mathbf{F} = (6t - 5)\,\mathbf{i} + (t^2 - 2t)\,\mathbf{j}.$$

The velocity of P at time t seconds is $\mathbf{v}$ m s^{-1}. When $t = 0$, $\mathbf{v} = \mathbf{i} - 4\mathbf{j}$.

(a) Find $\mathbf{v}$ at time t seconds.

(6)

When $t = 3$, the particle P receives an impulse $(-5\mathbf{i} + 12\mathbf{j})$ N s.

(b) Find the speed of P immediately after it receives the impulse.

(6)

Leave blank

5.

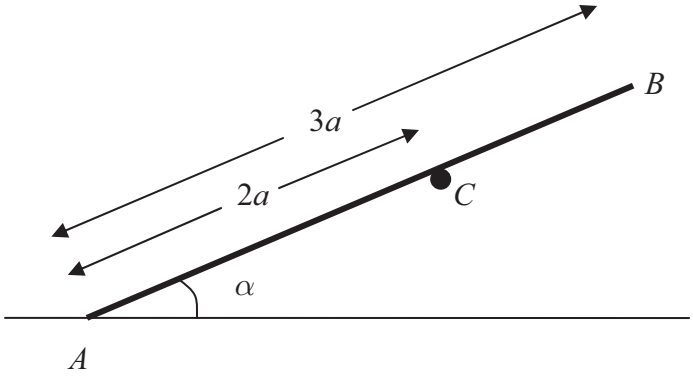

Figure 2

A plank rests in equilibrium against a fixed horizontal pole. The plank is modelled as a uniform rod AB and the pole as a smooth horizontal peg perpendicular to the vertical plane containing AB. The rod has length $3a$ and weight W and rests on the peg at C, where $AC = 2a$. The end A of the rod rests on rough horizontal ground and AB makes an angle α with the ground, as shown in Figure 2.

(a) Show that the normal reaction on the rod at A is $\frac{1}{4}(4 - 3\cos^2 \alpha)\, W$.

(6)

Given that the rod is in limiting equilibrium and that $\cos \alpha = \frac{2}{3}$,

(b) find the coefficient of friction between the rod and the ground.

(5)

H 2 9 4 9 8 A 0 1 2 2 4

Leave blank

Question 5 continued

Leave blank

6.

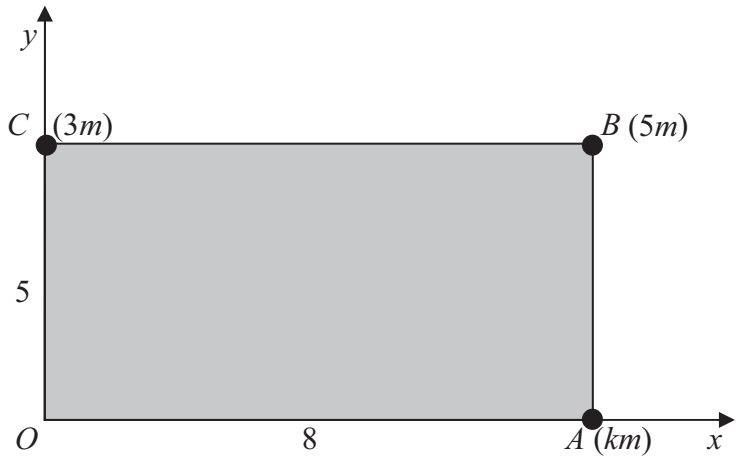

Figure 3

Figure 3 shows a rectangular lamina *OABC*. The coordinates of *O*, *A*, *B* and *C* are (0, 0), (8, 0), (8, 5) and (0, 5) respectively. Particles of mass km, $5m$ and $3m$ are attached to the lamina at *A*, *B* and *C* respectively.

The x-coordinate of the centre of mass of the three particles *without the lamina* is 6.4.

(a) Show that $k = 7$.

(4)

The lamina *OABC* is uniform and has mass $12m$.

(b) Find the coordinates of the centre of mass of the combined system consisting of the three particles and the lamina.

(6)

The combined system is freely suspended from *O* and hangs at rest.

(c) Find the angle between *OC* and the horizontal.

(3)

Leave blank

Question 6 continued

Leave blank

7.

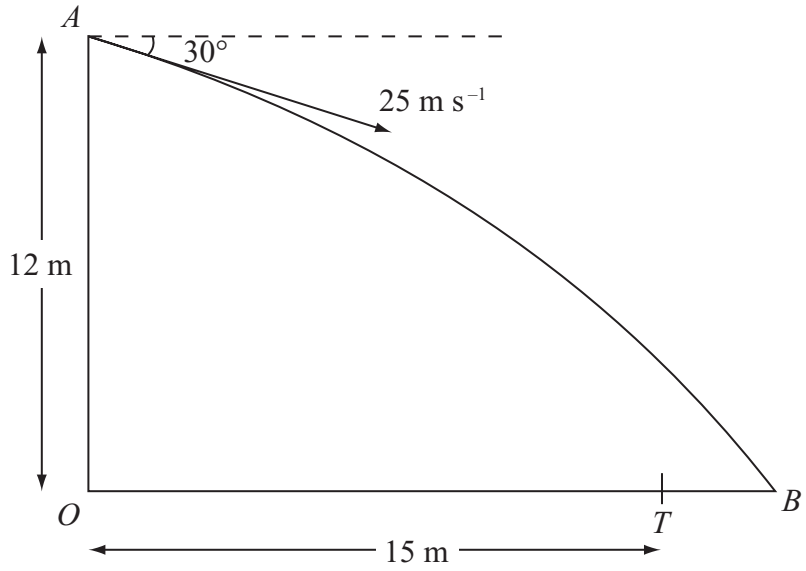

Figure 4

A ball is thrown from a point A at a target, which is on horizontal ground. The point A is 12 m above the point O on the ground. The ball is thrown from A with speed 25 m s^{-1} at an angle of 30° below the horizontal. The ball is modelled as a particle and the target as a point T. The distance OT is 15 m. The ball misses the target and hits the ground at the point B, where OTB is a straight line, as shown in Figure 4. Find

(a) the time taken by the ball to travel from A to B,

(5)

(b) the distance TB.

(4)

The point X is on the path of the ball vertically above T.

(c) Find the speed of the ball at X.

(5)

H 2 9 4 9 8 A 0 2 0 2 4

Leave blank

Question 7 continued

Q7

(Total 14 marks)

TOTAL FOR PAPER: 75 MARKS

END